ResearchGate

See discussions, stats, and author profiles for this publication at: https://www.researchgate.net/publication/335977177

Recent Advances in Low-Current Hollow Cathodes at SITAEL

Conference Paper · September 2019

CITATIONS
4

READS
612

8 authors, including:

Daniela Pedrini
University of Pisa
42 PUBLICATIONS **813** CITATIONS

SEE PROFILE

Ruzbeh Hadavandi
SITAEL S.p.A.
24 PUBLICATIONS **111** CITATIONS

SEE PROFILE

Cosimo Ducci
Sitael
19 PUBLICATIONS **138** CITATIONS

SEE PROFILE

Tommaso Misuri
ArianeGroup
48 PUBLICATIONS **411** CITATIONS

SEE PROFILE

All content following this page was uploaded by Daniela Pedrini on 23 September 2019.

The user has requested enhancement of the downloaded file.

Recent Advances in Low-Current Hollow Cathodes at SITAEL

IEPC-2019-782

Presented at the 36th International Electric Propulsion Conference
University of Vienna • Vienna, Austria
September 15-20, 2019

Daniela Pedrini[1], Federico Cannelli[2], Ruzbeh Hadavandi[3], Cosimo Ducci[4], Ugo Cesari[5], Tommaso Misuri[6], Mariano Andrenucci[7]
SITAEL S.p.A., Electric Propulsion Division, Ospedaletto, Pisa, Italy

and

Fabrizio Paganucci[8]
University of Pisa, Department of Civil and Industrial Engineering, Pisa, 56122, Italy

Abstract: This paper presents the progress in the development of two hollow cathodes designed at SITAEL to be coupled with low-power Hall effect thrusters. The two cathodes are named HC1 and HC3, where the number indicates the nominal discharge current they were conceived for. HC1 features a barium-oxide tungsten impregnated emitter, capable of producing a current in the range 0.3-1 A. The most recent activities were focused on the development of a heater made in-house, which demonstrated the capability to sustain more than 5000 thermal cycles. HC1 showed a successful operation on xenon with HT100 (100 W Hall thruster), with floating keeper, proving the effectiveness of the design in sustaining low levels of current. HC3 features a lanthanum hexaboride emitter, capable of producing a current in the range 1-3 A. Following the progress made on HC1, a reliable heater was manufactured, which proved its capability to raise the emitter temperature to ignition values at low keeper voltages (<300 V). After the heater characterization, a thermal test was performed to obtain the thermal map of the cathode. The cathode was then ignited and characterized in stand-alone configuration on xenon; next, it was coupled with MSHT400, namely the magnetically shielded version of SITAEL's 400 W Hall effect thruster, showing a successful operation on xenon. Future activities involving HC1 include the completion of qualification tests for the 100 W-power thruster unit, whereas HC3 will be tested with a barium-oxide tungsten impregnated emitter. In addition, a revisited version of HC3 will be developed, implementing modifications aimed at exploiting advanced manufacturing techniques, with the goal of reducing the cost still guaranteeing the reliability and mechanical robustness of the cathode design.

[1] Electric Propulsion Engineer, PhD, Space Propulsion Division, daniela.pedrini@sitael.com.
[2] Assembly, Integration and Testing Engineer, Space Propulsion Division, federico.cannelli@sitael.com.
[3] Electric Propulsion Engineer, Space Propulsion Division, ruzbeh.hadavandi@sitael.com.
[4] Electric Propulsion Lead, Space Propulsion Division, cosimo.ducci@sitael.com.
[5] Assembly, Integration and Testing Lead, Space Propulsion Division, ugo.cesari@sitael.com.
[6] Head of Propulsion Division, PhD, Space Propulsion Division, tommaso.misuri@sitael.com.
[7] Professor, Head of Propulsion Division, Space Propulsion Division, mariano.andrenucci@sitael.com.
[8] Associate Professor, Department of Civil and Industrial Engineering, f.paganucci@ing.unipi.it.

I.Introduction

THERMIONIC hollow cathodes are increasingly gaining interest for a number of space missions employing electric propulsion and having varied purposes: scientific research, telecommunications, Earth observation, astronomy, as well as technological, educational, and military applications. Advancements in microelectronics and miniaturized systems boosted the growth of micro- and nanosatellites constellations for Earth observation and remote sensing, paving the way for mass production of cost-effective electric thrusters. Since 2011, the number of launches of such small-scale satellites has increased at an approximate annual rate of 40%, a trend predicted to continue in future years[1].

The applications of low-power (<500 W) Hall Effect Thrusters (HETs) include drag compensation in low and very-low Earth orbits (LEO and VLEO), accurate final orbit insertion, and spacecraft end-of-life disposal. To fulfill the needs of the mini- and microsatellites market, the propulsion subsystems are required to be characterized by low cost, low power consumption, low mass, high thrust controllability, and manufacturing capability[2]. The hollow cathode represents one of the important challenges which remain for what concerns the propulsion systems needed for the new generation of satellites. As a matter of fact, the main critical parameters for small-scale (<500 W) HETs are lifetime and thrust efficiency, which are both affected by the hollow cathode. The design of hollow cathodes for low-current levels, especially down to 1 A and below, is hindered by the relatively high operating temperatures to be handled in small-sized devices. Another important aspect is tied with the power and propellant consumption, which have an increasing impact on the thruster efficiency as the discharge power is decreased[3].

In this context, two hollow cathodes have been developed at SITAEL to be coupled with 100 W- and 400 W-class HETs. The two hollow cathodes are named HC1 and HC3, conceived for SITAEL's HT100 and HT400 HETs, respectively. HT100 is a permanent-magnets thruster[4] operating in the 100-250 W range, generating a thrust between 4 and 13 mN, and a specific impulse between 900 and 1400 s. HT400 is a permanent-magnets thruster[5] operating at 350-800 W of power, providing 20-45 mN of thrust, and 1300-1700 s of specific impulse. Both thrusters were also designed and tested in their magnetically shielded (MS) version, as reported for MSHT400 in Section V.A.

HC1 and HC3 belong to a family of hollow cathodes conceived for a wider power range of HETs, up to 20 kW. The higher-current cathodes, HC20 and HC60, are described in a companion paper[6]. This paper describes the latest activities on low-current hollow cathodes at SITAEL, including the main results from the coupling tests with the respective thrusters.

II.Cathode Design

Both HC1 and HC3 feature the architecture of a thermionic, orificed hollow cathode, as schematically shown in Figure 1. An active electron emitter is placed inside a tube wrapped by a heating element to warm the emitter up to thermionic emission temperatures. Thermal shields are included to improve the thermal efficiency, and an electrode called keeper is used to help the cathode ignition by applying a positive potential with respect to the inner tube. The keeper also protects the internal components from ion bombardment damage. The emitter is held in place by means of a tungsten spring placed inside the tube. Two alternatives are commonly used as electron emitter for a hollow cathode: dispenser emitter, and lanthanum hexaboride (LaB_6) emitter. A dispenser emitter consists of a porous tungsten matrix impregnated with barium aluminate compounds and, despite a higher susceptibility to contaminants with respect to bulk emitting materials (such as LaB_6), is characterized by a lower work function (in the order of 2.1 eV compared to 2.7 eV of LaB_6)[7]. The main advantage offered by a dispenser emitter, as compared to rare-earth cathodes, is the difference in work function, which implies a lower operating temperature[7], namely about 1300 K for a dispenser emitter and about 1900 K for LaB_6, to provide a current density of 10^5 Am^{-2}. The main drawback is that a dispenser emitter needs a lengthy activation procedure to let the chemical compounds diffuse toward the active surface.

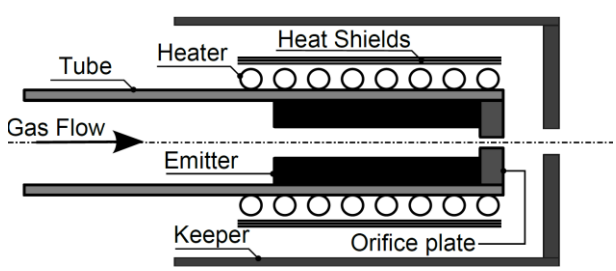

Figure 1. General schematic of an orificed hollow cathode.

The results presented in the following sections refer to a dispenser emitter for HC1, a LaB_6 emitter for HC3. The main cathode dimensions derive from a trade-off between multiple factors, which include the overall geometrical envelope, the discharge power, the ratio between emitter heating with respect to orifice heating, the emitter operating temperature, and the operating lifetime[8]. To perform this tradeoff, the results from a numerical model developed at SITAEL were used to assess the dependence of the cathode operating parameters on the functional dimensions (mainly orifice and emitter geometry)[9]. The cathode lifetime, L, which for LaB_6 is computed by the use of Lafferty's formula[10], was derived from the following empirical formula[11]:

$$L = 10^{-4} s^2 exp\left(\frac{2.822q}{kT} - 15.488\right) \tag{1}$$

where s is the insert thickness in μm and T is the surface temperature in K.

III.Experimental Setup

Several vacuum facilities are available at SITAEL, three of which were involved in the low-current cathode experimental campaigns. IV7 was used to characterize the heaters, to perform the cathode thermal tests, and to derive the electron emission curves. The HC3 stand-alone test was performed in LFF, whereas the coupling tests of both HC1 and HC3 with the respective thrusters were carried out in IV4 vacuum chamber. The characteristics of the facilities are described here below.

A. IV7

The IV7 vacuum chamber is a cylindrical vessel 0.5 m in diameter and 1 m in length, equipped with a primary scroll pump and a 500 l/s turbo molecular pump. The facility is able to reach a background pressure of 10^{-5} Pa (ultimate vacuum) when the combined pumping system is activated. The IV7 vacuum chamber was used for the preliminary characterization of the heaters, for the cathode thermal tests, and for the emission tests in the case of barium-based emitter as for HC1. The IV7 facility is shown in Figure 2 (left).

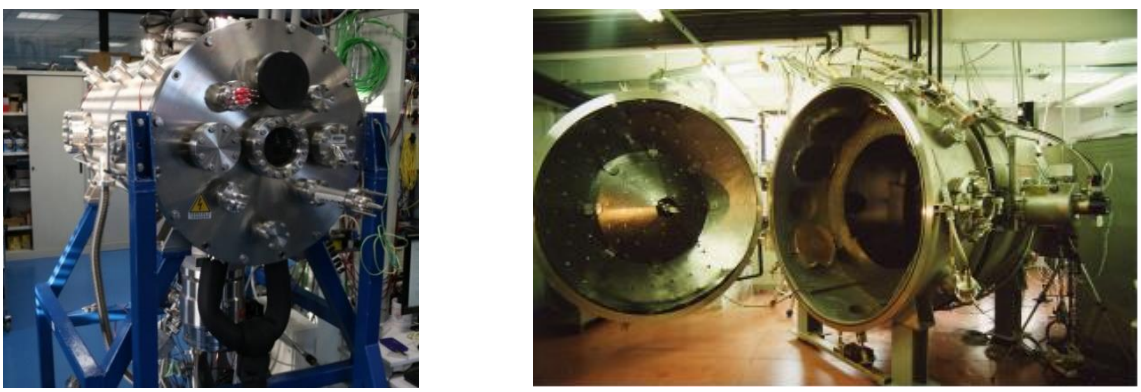

Figure 2. IV7 (left) and IV4 (right) vacuum chambers.

B. IV4

The IV4 facility consists of two different bodies made of AISI 316L stainless steel with low magnetic relative permeability (μ_r<1.06). The main chamber has a diameter of 2 m and a length of 3.2 m, whereas the small chamber is a 1 m-diameter, 1 m-length service chamber. The two bodies are connected through a 1 m-diameter gate valve. The small chamber was used to accommodate the thruster and cathode setup, including electrical and gas-feeding systems, whereas the main chamber allowed for a free expansion of the plasma plume and it is directly connected to the main pumping system. A bi-conical, water cooled, Grafoil-lined target is installed in order to dump the beam energy down. The chamber pumping system is capable of maintaining a back pressure in the range of 10^{-5} Pa (ultimate vacuum) by using a primary stage located in the main chamber and a secondary stage located in the small chamber. The combined pumping speed of the system is approximately 1.3×10^5 l/s for xenon. The pressure level within the chamber is continuously monitored by three Leybold-Inficom IT90 Pirani/Bayard-Alpert sensors and recorded via LabVIEW. IV4 is the facility where the coupling tests of cathode and thruster were performed. The IV4 vacuum chamber is shown in Figure 2 (right).

C. LFF

LFF consists of two stainless steel AISI 316 vessels: the main chamber (MC) and the auxiliary chamber (AC). The main chamber has a diameter of 1.2 m and a length of 2.8 m, whereas the auxiliary chamber is a 0.5 m-diameter, 1 m-length service chamber. The two volumes are connected by a large gate valve (LGV) which can be exploited to use the auxiliary chamber as recovery area during maintenance and regeneration of the MC. LFF is equipped with two separated pumping systems. The main pumping system (MPS) is located in the MC and includes a rotary pump Varian Triscroll PTS 600 (28 m^3/h) for fore vacuum, a turbopump Varian TV-2000HT (2000 l/s) for high vacuum, a cryopump Leybold Coolvac 1500 for ultra-high vacuum, and a cold head Leybold Coolpower 140T. The auxiliary pumping system (APS), located in the AC, includes a rotary pump Varian Triscroll PTS 300 (15 m^3/h) for fore vacuum and a turbopump Varian V-301HT (300 l/s) for high vacuum. The pressure level in the chamber is continuously monitored by one sensor Alcatel AHC 1010 and one sensor Leybold ITR90 both placed in the AC, and two sensors Leybold ITR90 placed in the MC. The facility can reach an ultimate pressure lower than 5×10^{-6} Pa. The stand-alone test of HC3 with external anode plate was performed in the LFF facility, which is shown in Figure 3.

Figure 3. LFF vacuum chamber.

D. Electrical Setup

The general test schematic adopted for the HC3 characterization with external anode plate is shown in Figure 4. A current-limited Huettinger PFG5000 (1000 V, 6 A) power supply controlled the cathode-to-keeper voltage during discharge initiation, and the current during operation. The cathode-to-anode current was controlled using a Sorensen DLM 300-3.5E (300 V, 3.5 A) power supply. The heater was controlled using a Sorensen DCS 80-13E (80 V, 13 A) power supply. All the power supplies were connected to a common negative reference and the setup was electrically floating with respect to ground. The electrical parameters were measured by using current (LEM LA25-NP) and voltage probes (LEM LV25-P). K-type thermocouples were installed on the mounting flange constituting the mechanical interface, and on the backside of the anode. The error associated with the DC voltage measurements is ±2%, whereas a relative error of ±1% is evaluated for the current measurements. The pressure in the cathode line was monitored by means of an MKS 722A13MGA2FA pressure transducer, whose accuracy is 0.5% on the measured values and whose full scale range is 1000 torr.

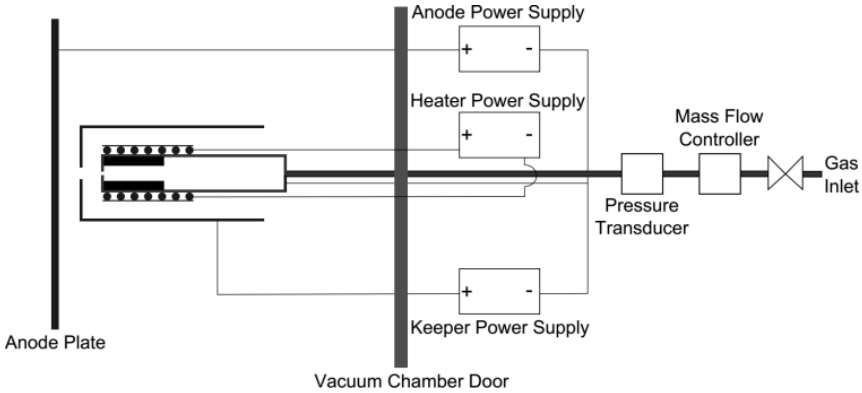

Figure 4. Setup schematic for HC3 stand-alone test.

The electrical schematic for the coupling tests of both HC1 and HC3 with the respective Hall thrusters is similar to the one reported in Figure 4., with the difference represented by the replacement of the anode plate with the thruster anode, along with an additional gas feeding line to the anode too.

IV.HC1: 0.3 to 1 A Hollow Cathode

E. HC1 Description and Completed Activities

HC1 is the smallest cathode designed at SITAEL to be coupled with HT100, which is the smallest and lowest power HET ever developed in Europe[4]. To this purpose, the cathode was designed to operate in the current range 0.3-1 A, as reported in Table 1 along with its other main specifications. The design of this low-current hollow cathode started several years ago: after the first prototypes several models of HC1 have been manufactured and tested, mainly in the frame of the uHETsat mission[12], dedicated to the in-orbit validation of HT100. Over the years, HC1 has been extensively characterized in stand-alone mode with an external anode plate, and in coupled configuration with HT100[13]. Whereas the cathode functional unit proved to successfully run in the expected range of operating conditions, the main improvements to meet the requirements of a space mission were related to the heater and in general to the cathode structure, which has to sustain the environmental loads. As such, an extensive characterization of heater prototypes was carried out to select the final configuration to be included in the cathode assembly, on the basis of geometry and materials used.

The selected heater proved to be efficient and robust, as demonstrated by a thermal cycling test still ongoing, which has reached more than 5000 on/off cycles. The heater thermal cycling test is being carried out by switching the heater on at 7 A (maximum current level for cathode ignition), switching it off after 5 minutes, and waiting 20 minutes of cooling down. The heater efficiency in warming up the emitter was evaluated during a dedicated thermal test, where the cathode was equipped with thermocouples to obtain a temperature map as a function of the heater power. A K-type thermocouple measured the emitter temperature, with the results shown in Figure 5: a heater current of 5.8 A, corresponding to about 35 W heater power, allowed for reaching an emitter steady-state temperature of about 1000 °C. In the following figures, the measurement error is included in the marker size.

Parameter	Value
Discharge current	0.3-1 A
Mass flow rate	0.08-0.2 mg/s
Heater power	≤ 50 W
Keeper ignition voltage	≤ 100 V
Lifetime	≥10000 h
On/off cycles	≥10000
Cathode mass	40 g
Geometrical envelope (including interface flange)	Φ40 mm diameter, 50 mm length

Table 1. HC1 Technical Specifications.

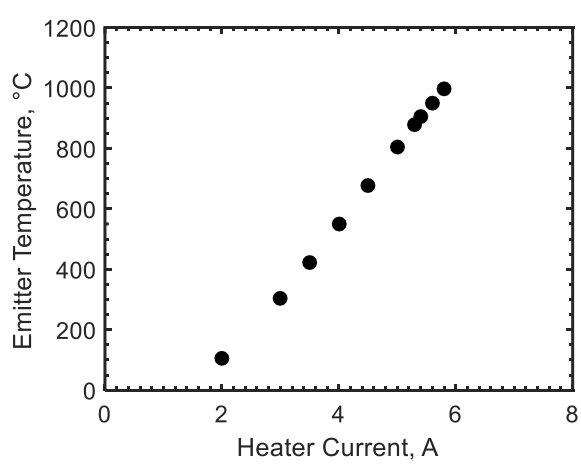

Figure 5. Emitter temperature as a function of heater current.

With the information provided by the thermal test, a cathode heating sequence could be identified, according to the need for activating the barium-based emitter. An example of heating ramp is shown in Figure 6, where the emitted current is reported as a function of heater current. A variability in the emitted current values of about 20% among different cathodes was observed, which is ascribed to the measurement uncertainties of such low current values. Nevertheless, the emission curve remains an important indication, in terms of the emitted current trend with increasing heater power, to evaluate the success of the cathode activation. After the activation phase, the cathode could be ignited, with the typical parameters summarized in Table 2. The keeper voltage is normally applied before setting the final value of heater power, and lower values (<50 V at the beginning of life) are expected to be sufficient for ignition. The ignition sequence of HC1 in coupled configuration with HT100 is reported in Figure 7, in terms of current and voltage trends of heater, keeper, and thruster anode.

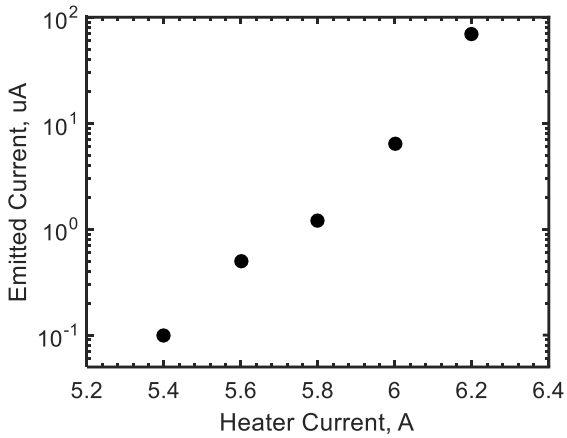

Figure 6. Emitted current as a function of heater current.

Heater Current	Heater Power	Mass Flow Rate (Xe)	Keeper Voltage
6.8 A	≤50 W	0.2 mg/s	100 V

Table 2. Cathode typical ignition parameters.

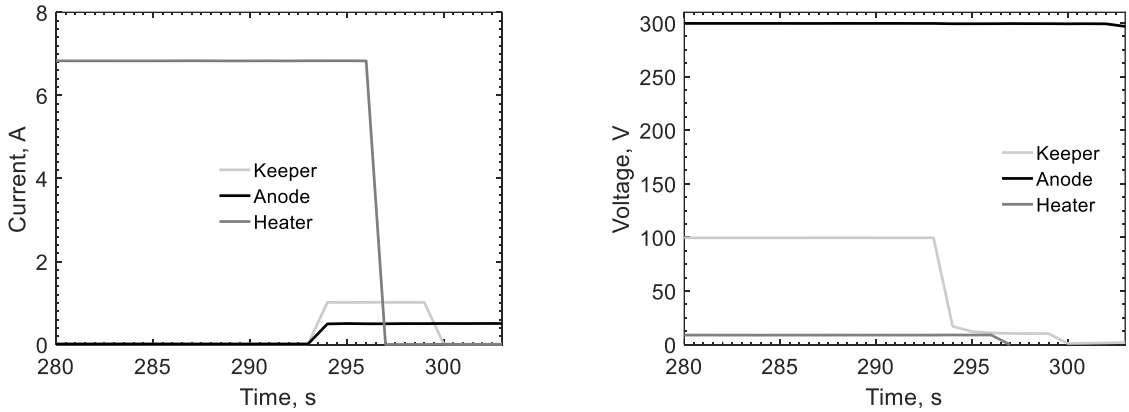

Figure 7. Thruster ignition sequence at the end of the heating transient: currents (left) and voltages (right).

In the frame of uHETSat program, during the qualification test campaign of the 100 W thruster unit composed by the HT100 anode unit and two HC1 cathodes, shock and vibration tests were successfully completed, as described in Ref. 12. The revisited cathode design, from the perspective of a mechanically robust device, thus proved to withstand the typical launch loads and vibrations required by the final application. Figure 8 shows HC1 as assembled (left), and during coupled operation with HT100 (right).

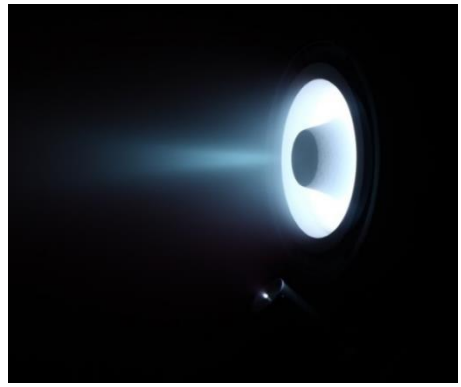

Figure 8. HC1 assembled (left), and operating with HT100 (right).

F. HC1 Future Developments

Despite the maturity of the current cathode design, a further improved version of HC1 is under manufacturing in the frame of the PLATiNO program[14]. The improvements are mainly aimed at facilitating the assembling of such a small device, along with a different solution for the electrical connections to the heater and electrodes. A CAD view of the latest version of HC1 is shown in Figure 9.

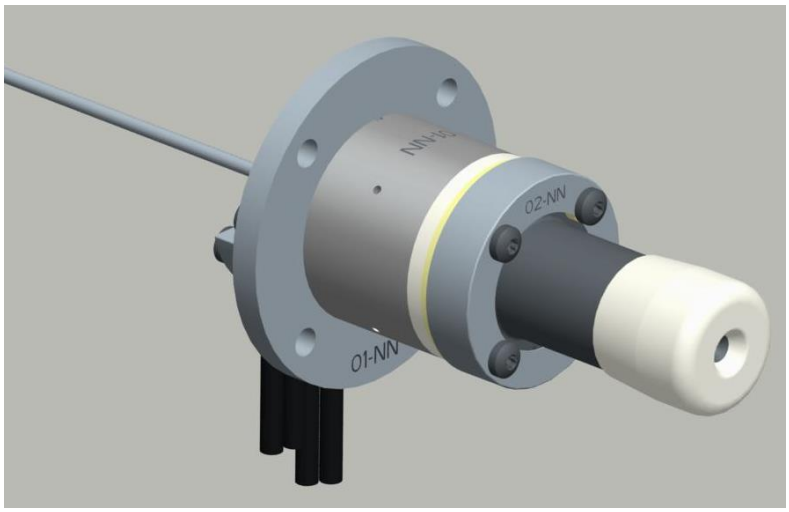

Figure 9. CAD view of the latest version of HC1.

In parallel with the uHETSat and PLATiNO programs, HC1 is the baseline cathode for the evaluation of alternative materials as electron emitter. In this context, a promising material for low-current hollow cathodes, namely the C12A7e$^-$ electride[15] is currently under evaluation for the use in HC1. As a matter of fact, HC1 is the best suited cathode among SITAEL's cathodes family for the assessment of a new emitter material, being the most advanced and already characterized with the two standard materials, namely BaO-W and LaB_6. To this purpose, the cathode design allows for a rapid emitter replacement and possible substitution of other components. Moreover, higher-current cathodes would be less suitable for a preliminary characterization of an electride hollow cathode, due to possible thermal problems which could occur even at lower current levels, as reported in the literature[16,17]. As such HC1, having a relatively low discharge current, allows for better controlling the thermal behavior during the use with an electride emitter. Another reason to choose HC1 as benchmark cathode for the electride material lies in the future applications: since the small satellites market is constantly growing, in particular for telecommunication constellations and for global access to the internet services, the idea of an alternative emitter presenting the claimed advantages of the electride is of great interest for a possible series production of low-current hollow cathodes. This consideration holds for advanced manufacturing techniques as well, which are being investigated to lower the manufacturing cost still maintaining the cathode performance, as described in Section V.B.

V.HC3: 1 to 3 A Hollow Cathode

A. HC3 Description and Completed Activities

HC3 was designed to be coupled with HT400 (SITAEL's 400 W Hall thruster), providing a discharge current in the range 1-3 A. In a similar way with respect to HC1, with which HC3 shares the design rationale, the cathode functional unit proved to operate successfully in the predicted operating envelope since the early studies of the first prototypes[13]. Then, following the progress made on HC1, the cathode was equipped with a more robust heater, which proved its capability to raise the emitter temperature to ignition values at low keeper voltages (<300 V). Major modifications to the cathode mechanical design were also implemented. The main specifications of HC3 are listed in Table 3. The baseline emitter for HC3 is LaB_6; however, a second version based on a BaO-W emitter was manufactured and will be tested in the near future. A lanthanum hexaboride emitter requires higher heater power for ignition, whereas a barium-oxide tungsten impregnated emitter is expected to operate at lower temperatures albeit necessitating a lengthy conditioning procedure.

Parameter	Value
Discharge current	1-3 A
Mass flow rate	0.1-0.3 mg/s
Heater Power	≤100 W
Keeper ignition voltage	≤300 V
Service life	9300 h
On/off cycles	11000 cycles
Cathode mass	100 g (without cables)
Geometrical envelope (including interface flange)	Φ50 mm diameter, 50 mm length

Table 3. HC3 Technical Specifications.

After the heater characterization, a thermal test was performed in IV7 vacuum chamber to obtain the thermal map of the cathode. The emitter temperature, measured by means of a D-type thermocouple, is shown as a function of heater current in left Figure 10. A temperature of about 1200 °C was reached on the emitter surface, by supplying the heater with a current of 4.7 A, corresponding to about 70 W heater power. The latter heater parameters were used to ignite the cathode during a preliminary stand-alone test with xenon in the LFF facility, where an auxiliary anode plate was placed 20 mm downstream of the keeper exit surface. The cathode was first ignited and characterized with the keeper only (i.e. with the discharge occurring between keeper and main tube), with the results shown in Figure 10 (right) at two mass flow rates, namely 0.2 and 0.3 mg/s. The decreasing trend of the keeper voltage with increasing keeper current follows the typical trend of hollow cathodes electrical characteristics[7]. However, the dependence on mass flow rate is opposite than expected, since higher mass flow rates shall entail lower keeper voltages, at fixed keeper current[18]. The lower keeper voltage values observed at lower mass flow rate could be ascribed to the sequence followed to characterize the cathode: since the operating points at 0.2 mg/s were tested after the corresponding points at 0.3 mg/s, the prolonged cathode operation could have affected the emitter thermal conditions, facilitating the thermionic electron emission.

Following the characterization with the keeper only, several operating points with the external anode were tested, selecting representative current values as expected during coupled operation with a Hall thruster. As reported in Table 4, the cathode run with a discharge current of 0.7 and 2 A on the anode without the need of the keeper. Nevertheless, the mass flow rate required to sustain 2 A on the anode was 0.8 mg/s, much higher than the cathode nominal operating range. This outcome is considered an effect of anode geometry and distance: during the coupling test with a Hall thruster, the cathode position shall be selected in such a way to guarantee the operation within the mass flow rate limits, not to deteriorate the thrust efficiency. HC3 is shown during the stand-alone test campaign in Figure 11.

Afterward, in the frame of CHEOPS project, the cathode was coupled with Safran's PPS®X00 thruster in the ICARE-CNRS PIVOINE facility, Orléans, France[19]. The test was aimed at verifying the cathode ignition sequence and varying the cathode mass flow rate in steady-state conditions at fixed discharge current. Following the thruster ignition procedure, which foresees a combined ignition (i.e. with the anode discharge immediately established without waiting a phase with the keeper on alone), a power of about 80 W was supplied to the heater for the cathode ignition. With the selected heater power, the thruster was switched on multiple times in a repeatable way, by applying 300 V keeper voltage (in pulsed mode) and with 0.4 mg/s Xe cathode mass flow rate. During coupled operation, the keeper was always left floating. In addition, a characterization was carried out by varying the discharge power from 300 to

900 W. The cathode mass flow rate was found to be between 0.35 and 0.8 mg/s Xe for coupled operation, which is higher than the expected range. This effect is ascribed to the cathode position, which was not optimized for HC3: during the next test campaign, the cathode position is going to be changed to lower the cathode mass flow rate required for stable operation with the thruster. HC3 is shown during the test campaign at PIVOINE in Figure 12.

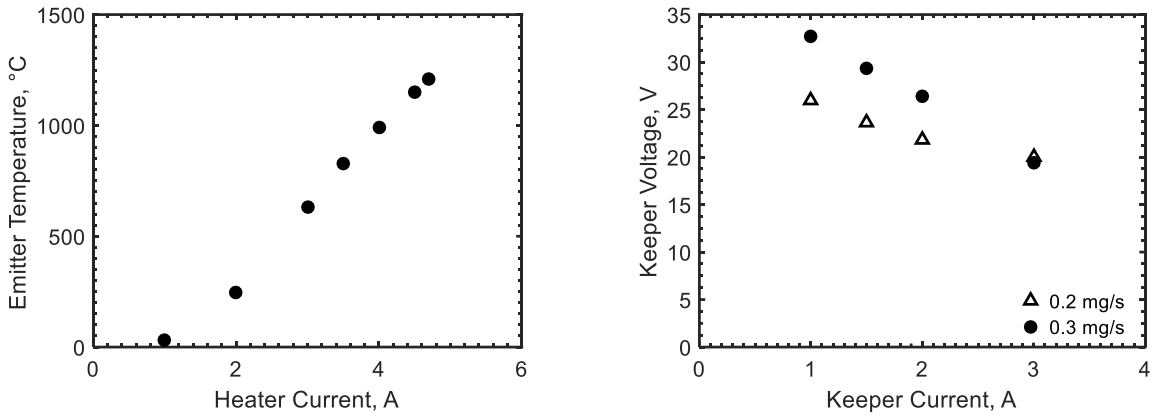

Figure 10. Emitter temperature as a function of heater current (left), keeper voltage as a function of keeper current (right).

Anode Current, A	Keeper Current, A	Mass Flow Rate, mg/s	Keeper voltage, V
1.0	0.5	0.3	17.6
0.7	0	0.3	0
2	0	0.8	0

Table 4. Operating points tested during the stand-alone experimental campaign.

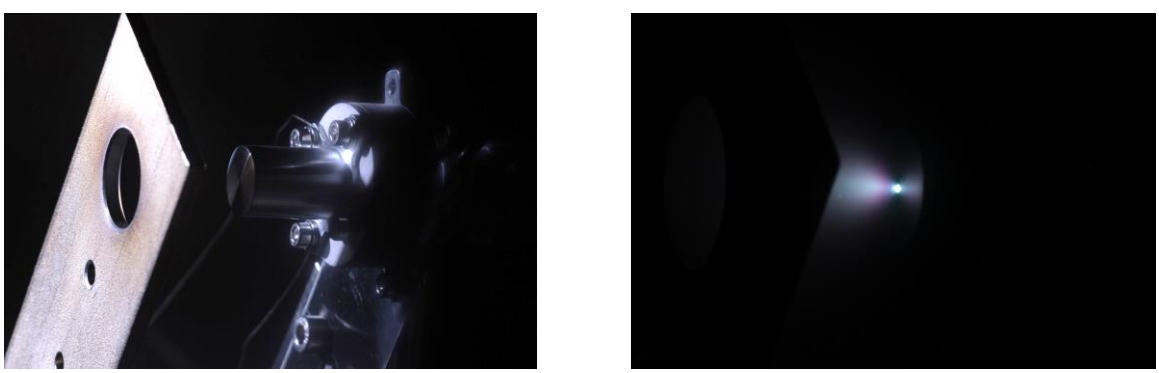

Figure 11. Stand-alone test at SITAEL: HC3 mounted on the test setup (left) and operating with anode plate (right).

HC3 was then coupled with MSHT400, namely SITAEL's magnetically shielded version of the 400 W Hall thruster, in the IV4 facility[20]. The thruster ignition procedure foresees the cathode ignition on the keeper only, with a current of 1.5 A, after which the anode discharge can be established. A power of about 100 W was supplied to the heater, to start the cathode with a keeper voltage lower than 300 V and 0.3 mg/s Xe within a time window of 5 minutes. The cathode proved to sustain the discharge in the operating envelope tested, between 250 and 650 W discharge power, with the same mass flow rate used for ignition, i.e. 0.3 mg/s Xe. In addition, the cathode was able to sustain the discharge even at lower mass flow rates. As a matter of fact, the cathode mass flow rate was successfully decreased down to 0.1 mg/s both during the operation with 1.5 A keeper current only, and also during coupled operation at 430 W discharge power and 2 A discharge current (keeper left floating), demonstrating the cathode position effect on the required mass flow rate, compared to the test with PPSX00.

HC3 is shown mounted and during operation in IV4 in Figure 13. Further details about the MSHT400 test campaign are given in Ref. 20.

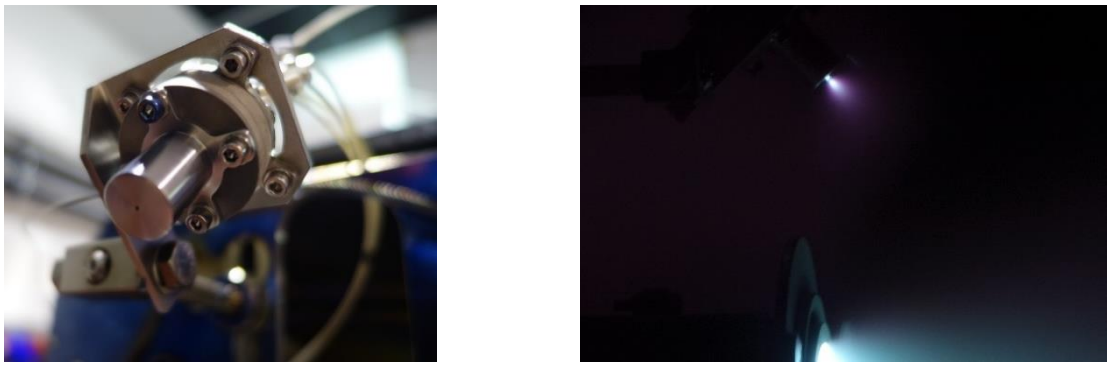

Figure 12. Coupling test in PIVOINE (ICARE-CNRS): HC3 mounted on the test setup (left) and operating with Safran's PPS®X00[19](right).

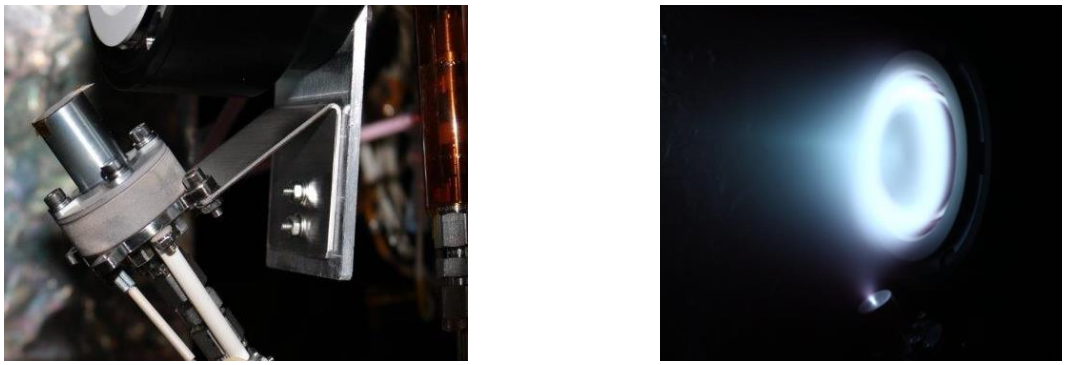

Figure 13. Coupling test in IV4 (SITAEL): HC3 mounted on the test setup (left) and operating with MSHT400[20] (right).

B. HC3 Future Developments

A second test campaign of HC3 with PPSX00 is planned in the frame of CHEOPS project, to find the relative position with respect to the thruster, allowing for operation in the expected mass flow rate range. Then, a complete coupling test with PPU (Power Processing Unit) and FMS (Fluid Management System) will be performed at SITAEL's premises. Another future activity concerns the experimental campaign on the HC3 version with barium-based emitter which is now under manufacturing phase. In a similar way with respect to HC1, the results will be compared with the LaB_6 version and the more suitable version for a given project will be selected on the basis of a trade-off between different aspects, including maximum heater power, maximum heater voltage, maximum conditioning time.

HC3 is also the baseline cathode for the evaluation of advanced manufacturing techniques applied to hollow cathodes, which is under consideration given the interest in large scale production for satellite constellations. Such a project implies a careful selection of the more appropriate technique to manufacture each cathode component, along with a re-design of the cathode structure to simplify the assembly, to exploit the features of the different techniques adopted, and to construct multi-functional parts to speed up the manufacturing and integration phases. The ultimate goal is reducing the cost still guaranteeing the reliability and mechanical robustness of the cathode design.

An additional activity planned for the near future is to test HC3 with krypton propellant, first in stand-alone mode and then in coupled configuration with MSHT400[20].

VI.Conclusion

This paper presented the significant advances obtained at SITAEL in the development of two low-current hollow cathodes, HC1 and HC3. After a multi-year dedication to obtain a robust design, important results were reached, paving the way for a consolidated use of these cathodes, coupled with the respective Hall thrusters, in ambitious space

missions. The activities are in progress, with multiple objectives: first, the in-orbit demonstration of HC1 operating with SITAEL's 100 W Hall thruster; second, the further maturation of HC3 to bring it to the HC1 level; third, the evaluation of different materials, manufacturing techniques, and propellant selection to answer the needs and increasing challenges of the constantly growing electric propulsion market.

Acknowledgments

The authors would like to express their gratitude to Carlo Tellini, Nicola Giusti, Luca Pieri, Ivan Andreani, and Massimo D'Urso, for their valuable assistance in preparing and performing the experimental campaigns.

The activities related to the development of HC3, along with the coupling test with PPS®X00, were performed under H2020 CHEOPS "Consortium for Hall Effect Orbital Propulsion System" Project, Grant Agreement number: 730135.

References

[1]Levchenko, I., Xu, S., Teel, G., Mariotti, D., Walker, M.L.R., and Keidar, M., "Recent progress and perspectives of space electric propulsion systems based on smart nanomaterials, *NATURE COMMUNICATIONS* | 8: 879.

[2]Levchenko, I., Xu, S., Mazouffre, S., Lev, D., Pedrini, D., Goebel, D.M., Garrigues, L., Taccogna, F., and Bazaka, K., "Perspectives, frontiers and new horizons for plasma-based space electric propulsion", Phys. Plasmas 26, XXXXXX (2019), under review.

[3]Lev, D.R., Mikellides, I.G., Pedrini, D., Goebel, D.M., Jorns, B.A., and McDonald, M.S., "Recent progress in research and development of hollow cathodes for electric propulsion", *Reviews of Modern Plasma Physics* (2019) 3:6.

[4]Ducci, C., Oslyak, S., Dignani, D., Albertoni, R., and Andrenucci, M., "HT100D Performance Evaluation and Endurance Test Results," IEPC-2013-140, 33rd International Electric Propulsion Conference, Washington DC, 6 – 10 October 2013.

[5]Oslyak, S., Ducci, C., Rossetti, P., and Andrenucci, M., "Characterization of an Adjustable Magnetic Field, Low-Power Hall Effect Thruster," IEPC-2011-143, International Electric Propulsion Conference, Wiesbaden, Germany, 11 – 15 Sept. 2011.

[6]Becatti, G., Pedrini, D., Saravia, M.M., Paganucci, F., Andreussi, T., and Andrenucci, M., "5-100 A LaB6 Hollow Cathodes for High-Power Hall Thrusters", IEPC-2019-760, 36th International Electric Propulsion Conference, University of Vienna, Vienna, Austria, September 15-20, 2019.

[7]Goebel, D.M., and Katz, I., *Fundamentals of Electric Propulsion: Ion and Hall Thrusters*, John Wiley and Sons, NJ, 2008.

[8]Pedrini, D., Albertoni, R., Paganucci, F., and Andrenucci, M., "Modeling of LaB6 Hollow Cathode Performance and Lifetime", *Acta Astronautica*, 106(2015), 170–178.

[9]Pedrini, D., Albertoni, R., Paganucci, F., and Andrenucci, M., "Theoretical Model of a Lanthanum Hexaboride Hollow Cathode", *IEEE Transactions on Plasma Science*, Vol. 43, No. 1, pp. 209-217, January 2015.

[10]Lafferty, J. M., "Boride cathodes," *Journal of Applied Physics*, Vol. 22, No. 3, 1951, pp. 299–309.

[11]Coletti, M., Intini Marques, R., and Gabriel, S. B., "Discharge hollow cathode design for a 4-Gridded Ion Engine", IEEE Aerospace Conference Proceedings 226(3): 1-12 (2010).

[12]Misuri, T., et al., "SITAEL HT100 Thruster, Full Ground Qualification", IEPC-2019-655, 36th International Electric Propulsion Conference, University of Vienna, Vienna, Austria, September 15-20, 2019.

[13]Pedrini, D., Cannelli, F., Cesari, U., Nania, F., Ducci, C., Misuri, T., Paganucci, F., and Andrenucci, M., "Low-Current Hollow Cathodes for Hall Effect Thrusters", SP2018_00408, Space Propulsion 2018, Seville, Spain, 14-18 May, 2018.

[14]Stanzione, V., and Sabbatinelli, B, "PLATiNO Project: a New Italian Multi-Application Small Satellite Platform for Highly Competitive Missons", IAC-18, B4,9-GTS.5,11,x47097, 69th International Astronautical Congress 2018.

[15]Rand, L., and Williams, J., "A Calcium Aluminate Electride Hollow Cathode", *IEEE Transactions on Plasma Science*, Vol. 43, No. 1, pp. 190-194, January 2015.

[16]Drobny, C., Tajmar, M., and Wirz, R.E., "Development of a C12A7 Electride Hollow Cathode", IEPC-2017-373, 35th International Electric Propulsion Conference, Georgia Institute of Technology, Atlanta, Georgia, USA, October 8-12, 2017.

[17]McDonald, M.S., and Caruso, N.R.S., "Ignition and Early Operating Characteristics of a Low-Current C12A7 Hollow Cathode", IEPC-2017-253, 35th International Electric Propulsion Conference, Georgia Institute of Technology, Atlanta, Georgia, USA, October 8-12, 2017.

[18]Goebel, D. M., Jameson, K. K., and Hofer, R. R., "Hall Thruster Cathode Flow Impact on Coupling Voltage and Cathode Life," *Journal of Propulsion and Power*, Vol. 28, No. 2, 2012, pp. 355–363.

[19]Vaudolon, J., Vial, V., Cornu, N., and Habbassi, I., "PPS®X00 Thruster Development Status at Safran", IEPC-2019-241, 36th International Electric Propulsion Conference, University of Vienna, Vienna, Austria, September 15-20, 2019.

[20]Ducci, C., Raiji, H., Pedrini, D., Misuri, T., and Benetti, L., "SITAEL's HT400 Hall Effect Thruster for Constellation Applications", IEPC-2019-885, 36th International Electric Propulsion Conference, University of Vienna, Vienna, Austria, September 15-20, 2019.

View publication stats